LINK-SUN (HONG KONG) ELECTRONICS LTD

Model No: LSMC12832-1

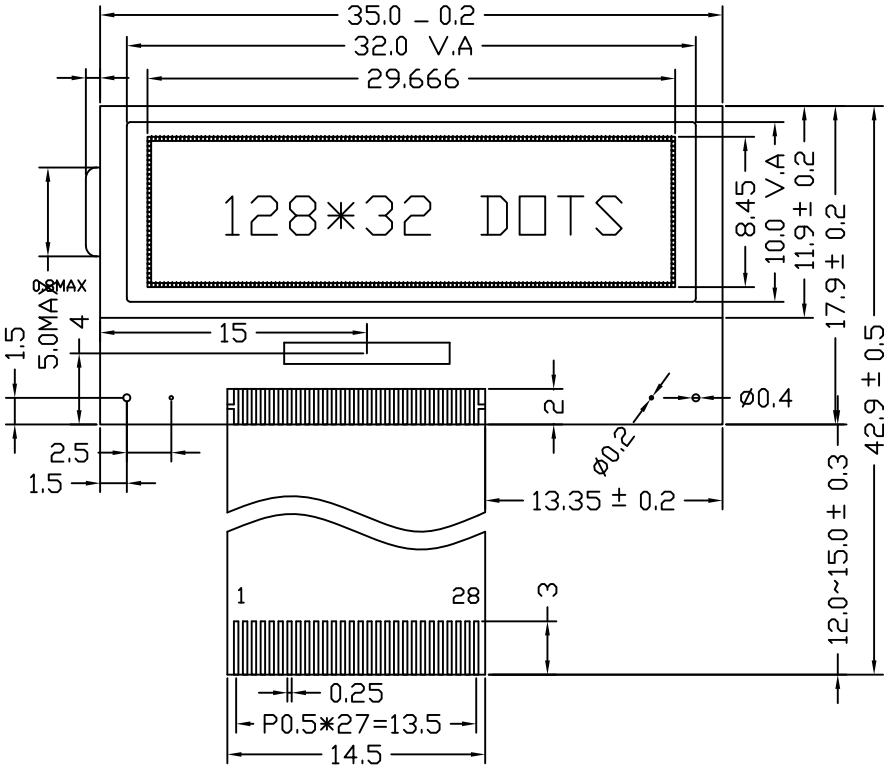

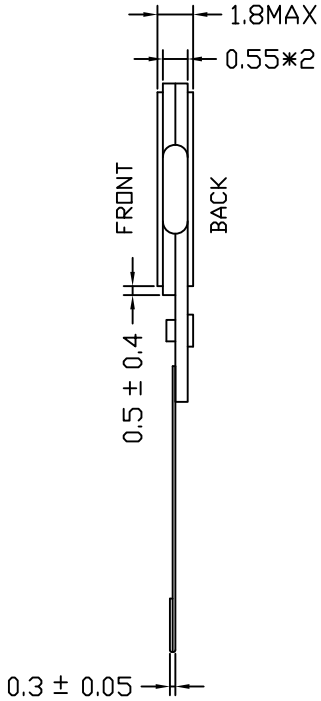

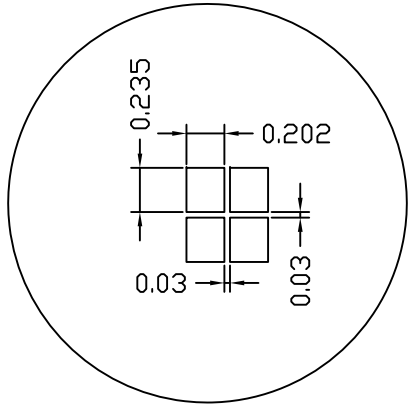

PIN	1	2	3	4	5	6	7	8	9	10	11	12	13	14
DESC	VDD	P/S	VSS	V5	V4	V3	V2	V1	CAP2+	CAP2-	CAP1-	CAP1+	CAP3-	VOUT
PIN	15	16	17	18	19	20	21	22	23	24	25	26	27	28
DESC	VSS2	D7	D6	D5	D4	D3	D2	D1	D0	/RD	/WR	A0	/RES	/CS1

1.OPERATING ROLTAGE: 3.0V
2.DRIUE METHOD: 1/33DUTY,1/6BIAS
3.VIEWING DIRECTION: 6:00
4.OPERATING TEMP: -10°C～60°C
5.STORAGE TEMP: -20°C～70°C
6.DISPLAY TYPE: FSTN,POSITIVE
7.IC:ST7565P(COG)

Tel:86-755-86009867 Fax:86-755-86009316 Website:www.link-sun.com Email:linksun@link-sun.com